Description	Dimension	Part name	Part number
Gas nozzle	ID ø 13 mm	DIX 1-3-5413 A	6390154130
Gas nozzle	ID ø 15 mm	DIX 1-3-5415 A	6390154150
Gas nozzle	ID ø 18 mm	DIX 1-3-5418 A	6390154180
Insulator		DIX 2-3-500	6390250000
Contact tip	ø 8 x 45 mm	DIX 3-2-_._ SR	6290354_ _
Contact tip	M6 x 24 mm	DIX 3-2-_._	6290300_ _
Contact tip	M6 x 28 mm	DIX 3-2-_._ CR-ZR	6290330_ _
Contact tip	M8 x 28 mm	DIX 3-2-_._ M8	6290301_ _
Contact tip	M8 x 28 mm	DIX 3-2-_._ M8 CR-ZR	6290331_ _
Tip adapter	M6	DIX GS 2 M6	628150006
Clamp nut		DIX 4-2-MAS	6390454000
Tip adapter	M8	DIX GS 2 M8	628150008
Gas diffusor		DIX 10- 3-540	6391054000
O - ring			639060003
Torch neck	0°	DIX 6-3-540 METZ	6390635400
Torch neck	22°	DIX 6-3-542 METZ	6390635420
Torch neck	45°	DIX 6-3-544 METZ	6390635440
Torch neck L	0°	DIX 6-3-540 L METZ	6390635402
Torch neck L	22°	DIX 6-3-542 L METZ	6390635403
Torch neck L	45°	DIX 6-3-544 L METZ	6390635404
Torch neck XL	0°	DIX 6-3-540 XL METZ	6390635405
Torch neck XL	22°	DIX 6-3-542 XL METZ	6390635406
Torch neck XL	45°	DIX 6-3-544 XL METZ	6390635407
Connecting piece		DIX MES 300/500	639061500041
Connecting piece, MEPTZ		DIX MEPS 300/500	6390665000
Clamp sleeve		DIX SH 270	629270270

Torch head	Standard	L	XL
DIX METZ 540	631354001	631154002	631154005
DIX METZ 542	631354002	631154003	631154007
DIX METZ 544	631154001	631154004	631154008

More service - More performance

DINSE is your dependable partner throughout the entire welding process. Contact us and schedule an appointment for personal consultation today!
We work together with you to find the best solution for your application.

040 / 658 75-255

METZ54x@dinse.eu

DINSE G.m.b.H. • Tarpen 36 • D-22419 Hamburg • Telephone: +49-(0)40 658 75-0 • Fax: -200 • info@dinse.eu • www.dinse.eu

„Each variant hits the bull's eye."

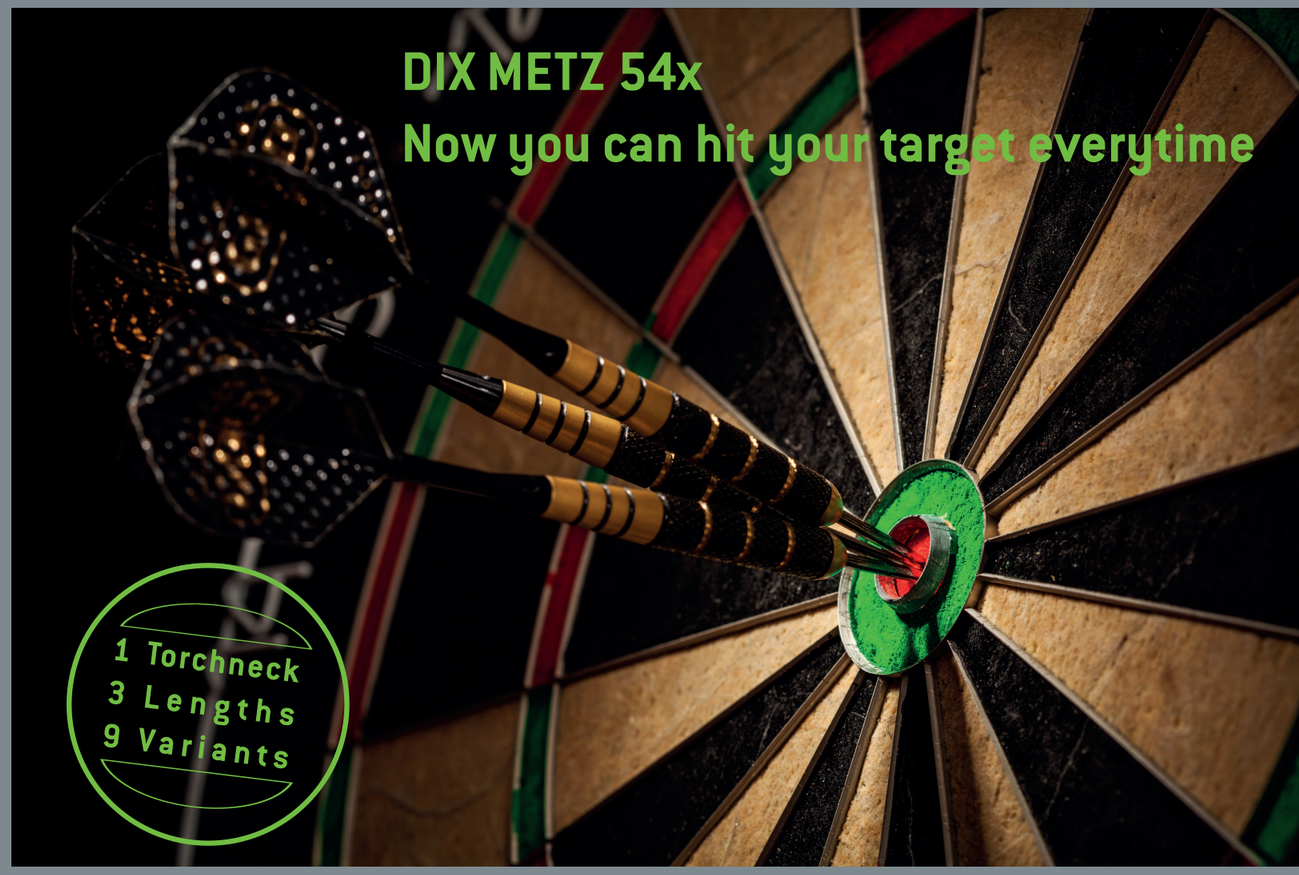

We turned the Special into a Standard:

- Torch necks in 9 different lengths and bending angles
- All models and wear parts in stock
- Maximum flexibility when welding complex geometries
- Reduced cost compared to special solution

liquid-cooled

DIX METZ 540 / 542 / 544 L / XL

Maximum flexibility achieved through standardized configurations: Tell us your welding application - we immediately deliver the precise torch neck for optimum component accessibility.

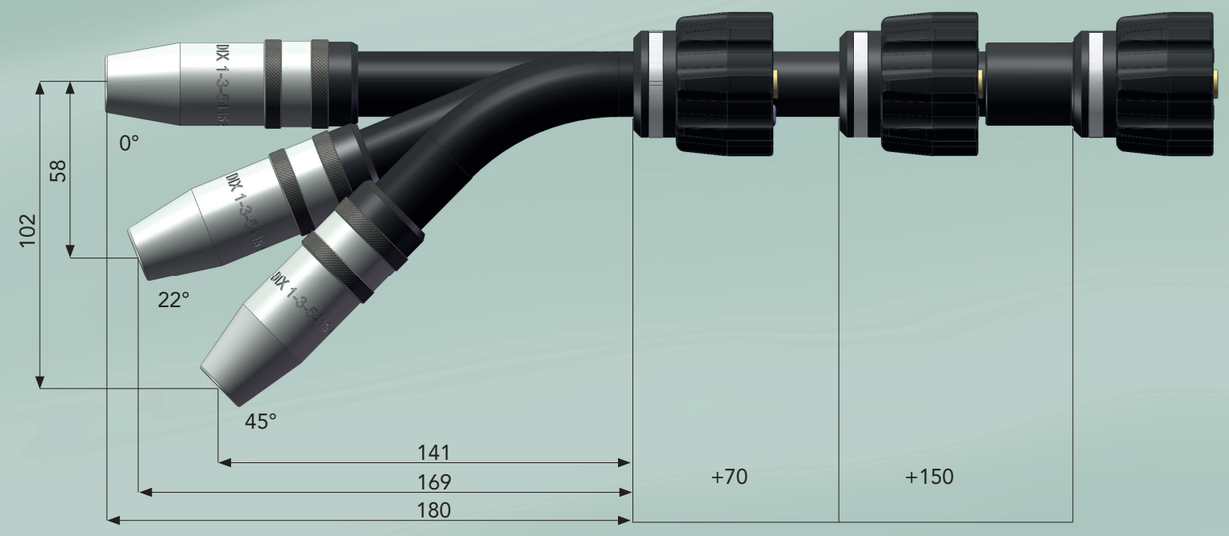

Perfect component access for each of your individual applications

Cost savings realized through standardized torch necks

High duty cycle and maximum productivity resulting from DINSE dual-circuit cooling

New standard lengths reduce inventory and allow immediate availability

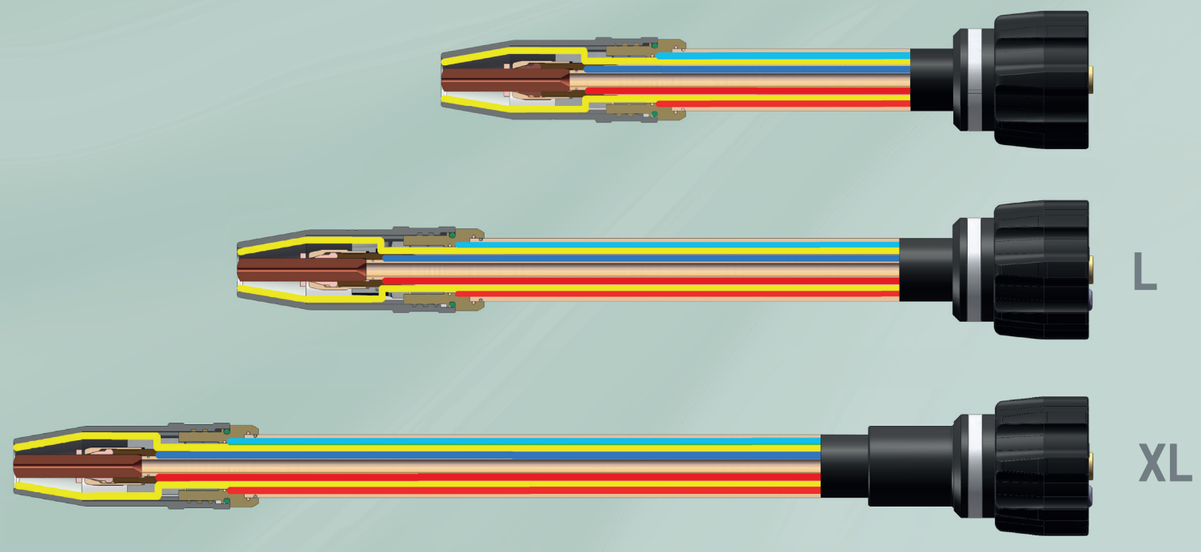

Superior gas coverage resulting from engineered gas channel

One single checking jig straightens all nine torch necks

Performance data (DIN EN 60 974-7)

DIX METZ 540 L / XL	450A/100% ED C1	400A/100% ED M21
DIX METZ 542 L / XL	450A/100% ED C1	400A/100% ED M21
DIX METZ 544 L / XL	450A/100% ED C1	400A/100% ED M21

Areas of application

Non-alloyed, low-alloy and high-alloy steels
Aluminum, copper and nickel-based alloys
Deposit welding, joint welding, large material thicknesses, high duty-cycle