Magnetic switch
Series MA-06

Description **MAA-0613-L-6**	Article number **6316306446**

Wiring diagramm

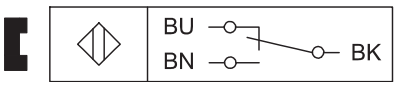

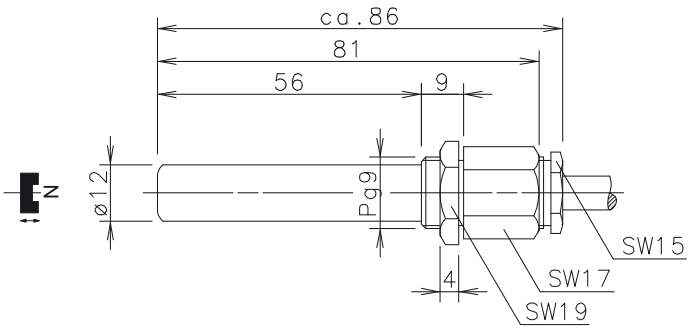

Identifying characteristics in accordance with EN 60947-5-1 and EN 62246-1

Electrical data		
Assured operating distance	S_a	10 mm
Switching element function		C.O.
Max. switching voltage		250 V
Max. switching current		1,0 A
Max. switching capacity		60 VA
Min. switching capacity		3 VA
Mechanical lifetime		3 x 10^8 switchings, however, according to load resetability
Repeat accuracy	R	± 0,1 mm under same geometrical conditions at the same temperature
Release point		25 mm
Shock		10 g (11 ms / ½ Sinewave)
Vibration		15 g (50 - 2000 Hz)
Corresponding magnet		T-62 N/S

Mechanical data	
Enclosure	Al / CuZn; encapsulated reed contact
Ambient air temperature	-5 °C … +70 °C
Type of protection	IP67 acc. ICE 529, EN 60529
Termination type	cable 4 x 0,75 mm^2 x 6 m ±5 %; PVC -outer jacket black
Assembly position	optional (assembly on iron means reduction of switch distance)

EU Conformity
acc. to directive 2014/35/EU