NOTICE
THIS DRAWING IS THE PROPERTY OF QualiTROL CORPORATION AND IS LOANED ONLY ON THE CONDITION THAT IT WILL BE USED TO FACILITATE THE PURPOSE FOR WHICH INTENDED AND NOT BE REPRODUCED, COPIED OR OTHERWISE DISPOSED OF, AND IS NOT TO BE USED IN WHOLE OR PART FOR FURNISHING INFORMATION RELATIVE TO THE MAKING OF DRAWINGS, PARTS APPARATUS OR PARTS THEREOF, EXCEPT BY WRITTEN ORDER FROM QualiTROL CORPORATION.

MODEL NO. 208–007

NOTES:

1. RED AND BLUE ARE NORMALLY CLOSED WHEN ALARM SWITCH IS MOUNTED AND ARMED AS SHOWN.
2. WHEN DEVICE OPERATES: BLUE AND RED ARE OPEN BLACK AND RED ARE CLOSED
3. WHEN THE SWITCH RESET LEVER IS MAN. DEPRESSED: BLUE AND RED ARE CLOSED BLACK AND RED ARE OPEN
4. FINISH: ASA #70 LT GRAY EPOXY
5. PG16 FITTING 208–007–10 ONLY.

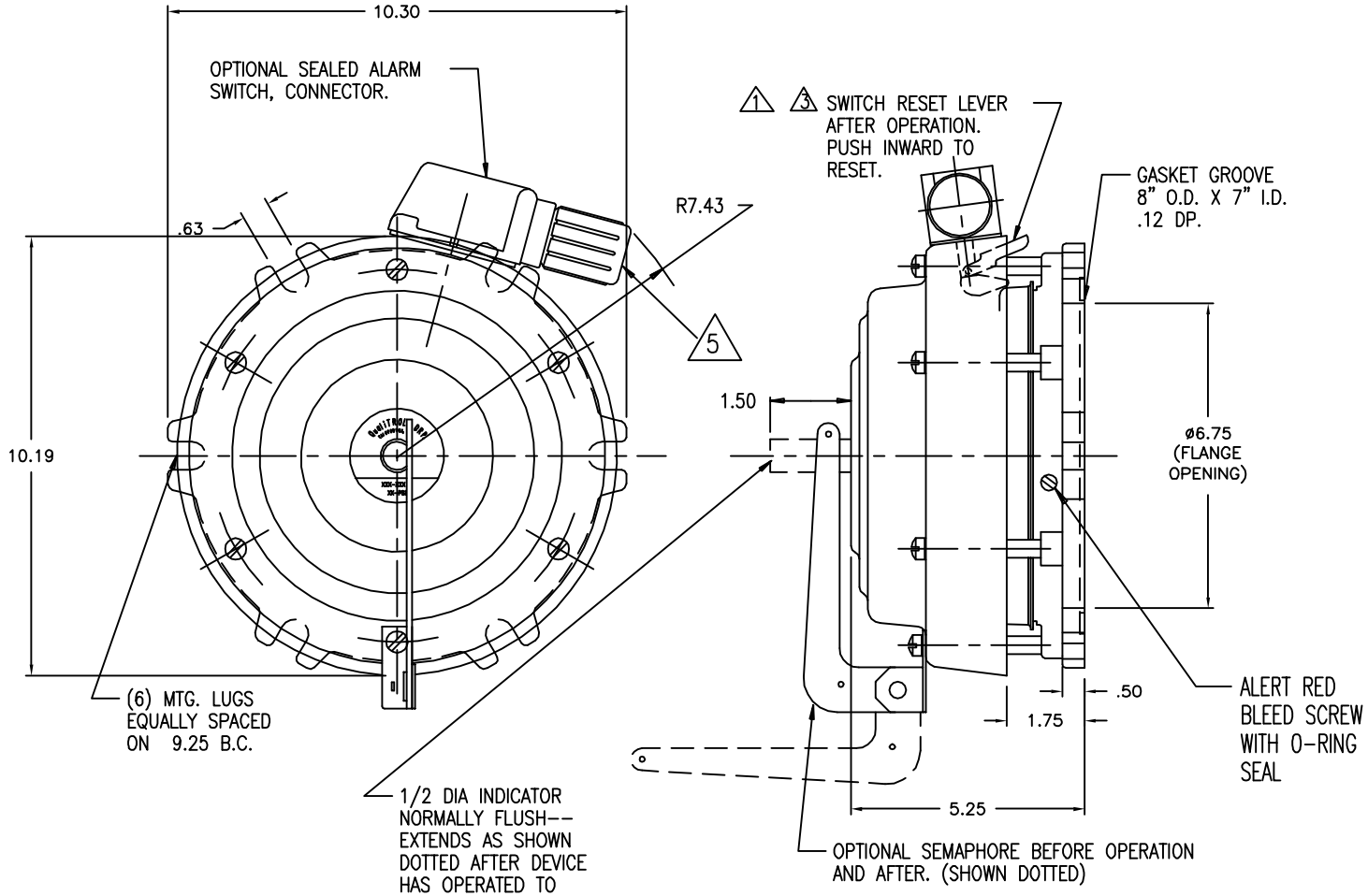

SWITCH RATING

15 AMP @ 125,250,480 VAC
.5 AMP @ 125 VDC } NON-INDUCTIVE
.25 AMP @ 250 VDC

WIRING DIAGRAM

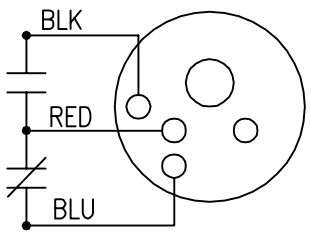

LET	DATE	ALTERATION	C.N.
–	8-21-03	@ SWITCH CONNECTOR: NOTE 5 WAS "6"	24028
–	6-10-98	DELETED PPS-65 NOTE; 1.50 WAS 1.81	19508

QUALITROL CORPORATION

DIMENSIONS AND TOLERANCES IN ACCORDANCE WITH ASME Y14.5M-1994

PH. (585) 586-1515
FAX (585) 377-0220
1385 FAIRPORT ROAD
FAIRPORT, NY 14450

FORM 0-473 REV.D 10/22/02

TITLE: PRESSURE RELIEF DEVICE WITH BLEED SCREW

MODEL NO. 208–007