Data Sheet

HOYER MOTORS

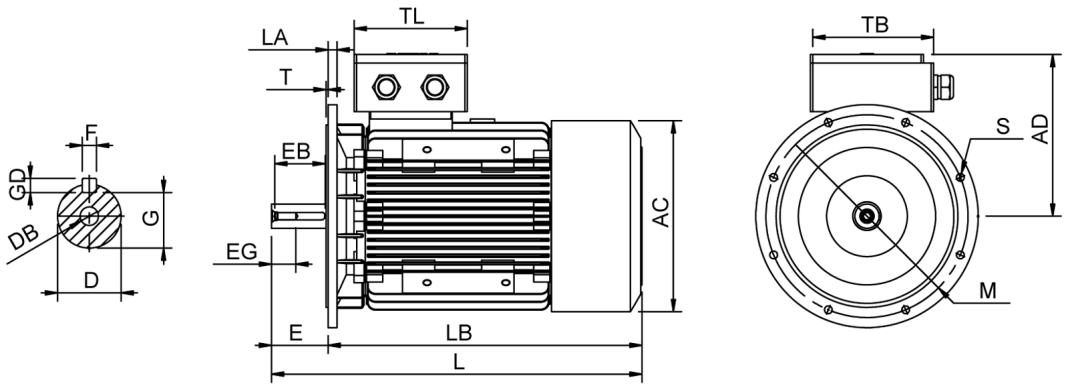

AC = 348	EG = 36	L = 705	P = 350
AD = 320	F = 14	LA = 20	S = 4 - Ø18
D = 48jk6	G = 42,50	LB = 595	T = 5
DB = M16	GD = 9	M = 300	TB = 220
E = 110	HB = 227	N = 250	TL = 210
EB = 95			

Type	**7AT 180M-4**	Rotor inertia (kgm²)	0,13
Mounting	B5	Noise level (dB(A))	69
Protection class	IP55	Vibration class	Grade-A
Insulations class	F	No load current (A)	13,0
Temperature rise	B	Winding resistance (ohm)	0,41
Standard	IEC 60034-1	Starting time (sec.)	10,00
Test standard	IEC 60034-2-1	Temperature rise winding	0
Alitude above s.l. max.(m)	1000	Temperature rise surface	0
Cooling method	IC411/TEFC	Tbox position	Top
Poles	4	Cable entry main	1 x M40x1,5 Ø22-32mm
Painting	Ral 9005		
DE. Bearing	6310-ZZ/C3	Cable entry accessory	1x M40x1,5 + 1x M20x
NDE. Bearing	6310-ZZ/C3	Terminal board thread	
Bearing fixed in	D-end	Thermal protection	PTC 3x130C
Weight (kg)	205	Space heater	2 X 40W / 230V
		Starting method	

Rated power (kW)	18,5			18,5			21,0		
Frequency (Hz)	50			50			60		
Voltage (V)	400	690		380			440		
Connection	D	Y		D			D		
Full load current (A)	35,5	20,5		37,4			36,3		
Speed (rpm)	1460			1460			1750		
Power factor cos(phi)	0,83			0,84			0,85		
Efficiency, 100/75/50 (%)	90,5	90,9	89,3	89,8	90,3	88,6	89,8	90,3	88,6
Efficiency class	IE1			IE1			IE1		
Ist/In	7,50			7,13			6,90		
Full load torque (Nm)	120			120			113		
Tst/Tn	2,70			2,43			2,41		
Tmax /Tn	3,10			2,79			2,76		
Duty	S1			S1			S1		
Ambient temp. (°C)	50			50			50		

According to .....:
Special features .... : EX II2G Ex db eb IIC T4 Gb, CESI 13 ATEX 007 X; Suitable for VFD